How to work with Fabric Frames

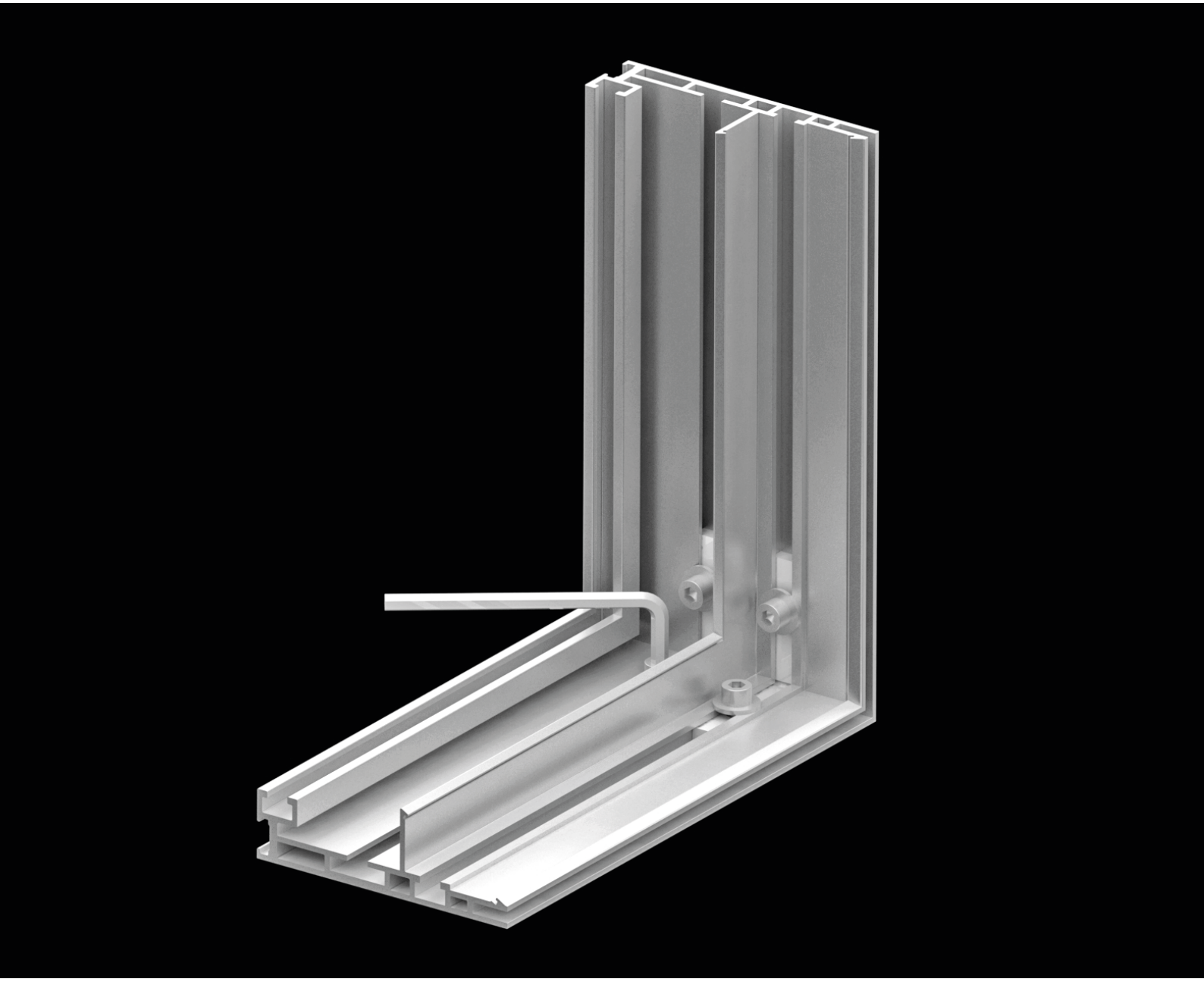

- Assembly instructions
- Frame construction
- Accessories
- Fabric information
- SF-Door & EL-Doors

SYSTEM STANDEX®

How to work with Fabric Frames

Table of contents:

Assembly of SF-44-1, SF-44-2, SF-44-2-C, SF-44-4, SF-44-6, SF-44-9, SF-44-85, SF-44-120 frames..... 3

Assembly of SF-44-5 frames..... 4

Assembly of SF-44-7, SF-44-8 frames..... 5

Assembly of SF-44-10 frames..... 6

Assembly of SF-36-2 frames..... 7

Assembly of SF-44-2A frames..... 8

Assembly of SF-44-100, SF-44-150-2 frames..... 9

Assembly of SF-44-120-2, SF-44-150 frames..... 10

Assembly of BLF frames..... 11

Assembly of modular frames..... 12

Assembly of SF-44-44-2 frames..... 13

Assembly of SF-44-44-4 frames..... 14

Frame construction..... 15-17

Assembly of SF-44-door..... 18

Assembly of EL-DOOR-1 and EL-DOOR -2..... 19

Assembly of EL-DOOR-3..... 20

TV bracket..... 21

Assembly of SF-44-H..... 22

Wall brackets..... 23

Steel bases..... 24-26

Fabric..... 27

For more information..... 28

How to work with Fabric Frames

Valid for profiles:

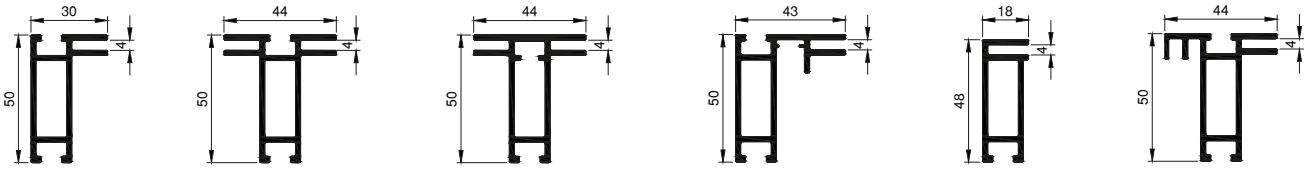

SF-44-1 SF-44-2 SF-44-2-C SF-44-4* SF-44-6 SF-44-9**

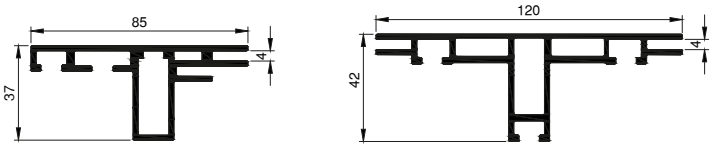

SF-44-85*** SF-44-120***

** can be manufactured with 20W LED Strips and light panels*
*** can be manufactured with 5 or 12mm panels in the back*
**** can be manufactured with 5x3W and 3x3W LED modules*

Assembly instructions:

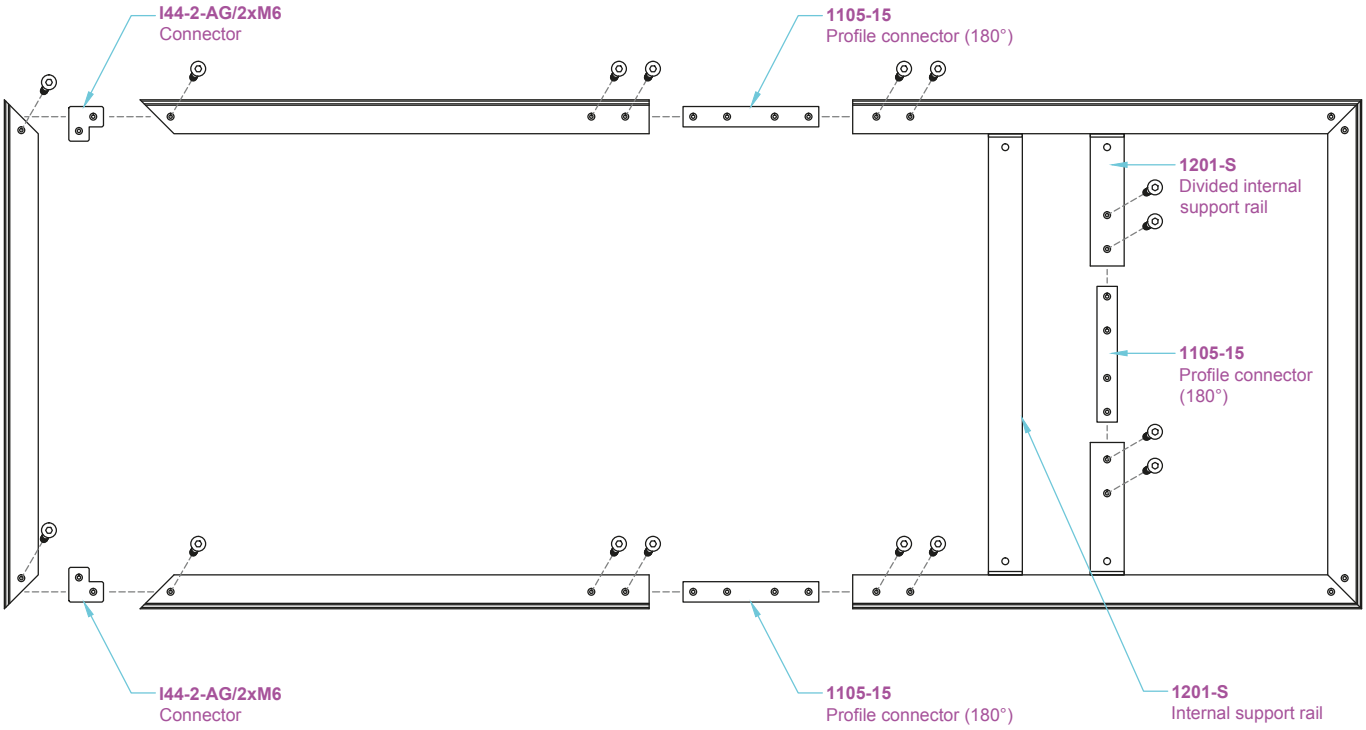

Accessories:

Connector	Handle	Profile connector (180°)	Internal support rail
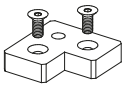	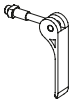	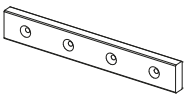	
I44-2-AG/2xM6	SF-HANDLE#	1105-15	1201-S

 # cannot be used for SF-44-2-C, SF-44-6, SF-44-85 and SF-44-120

How to work with Fabric Frames

Valid for profiles:

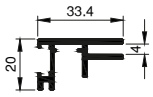

SF-44-5

Assembly instructions:

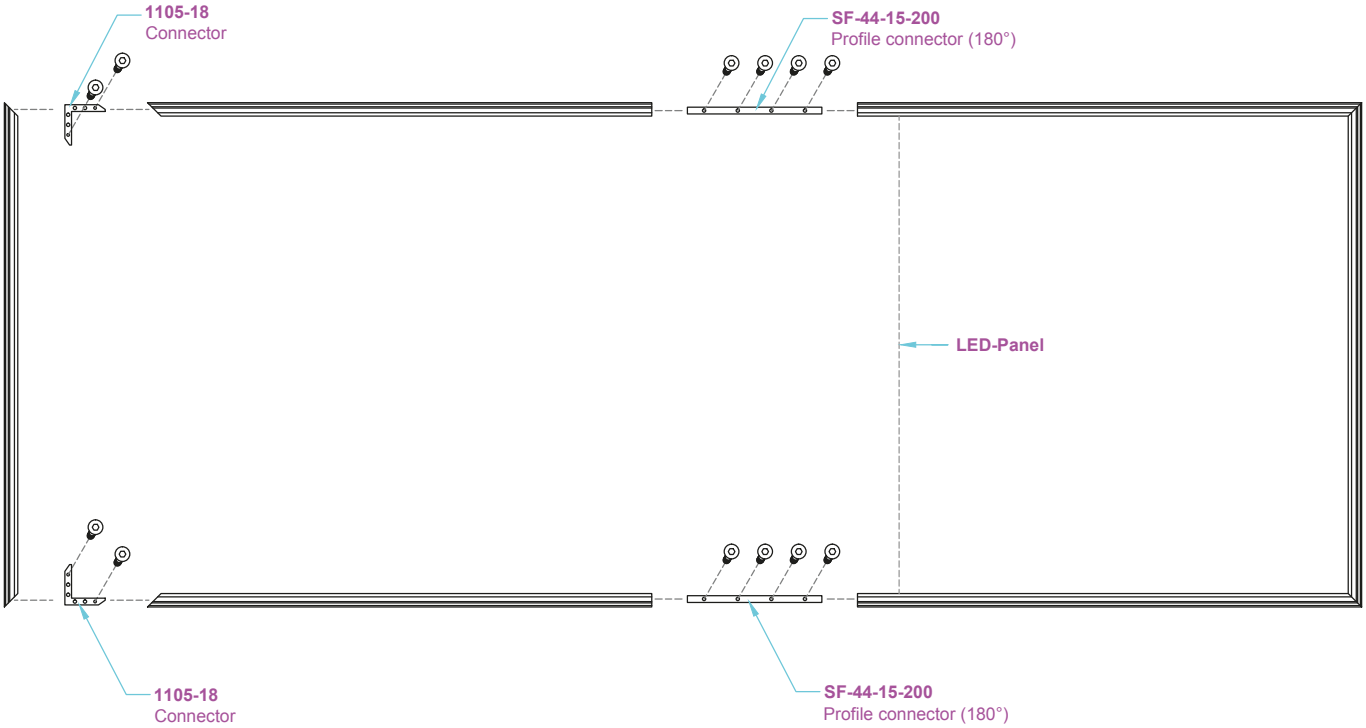

Accessories:

Connector	Profile connector (180°)
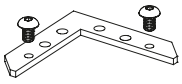	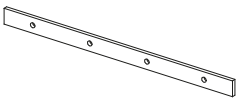
1105-18	SF-44-15-200

How to work with Fabric Frames

Valid for profiles:

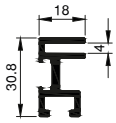

SF-44-7

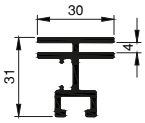

SF-44-8

Assembly instructions:

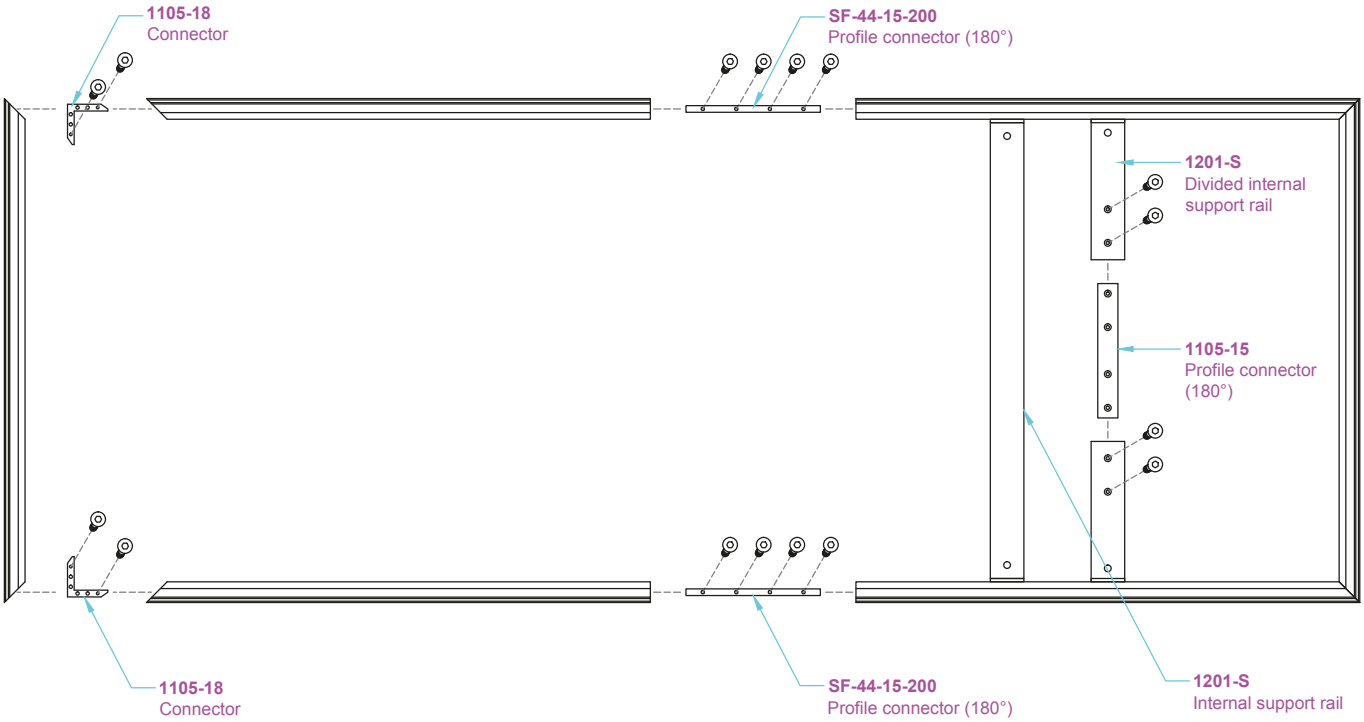

Accessories:

Connector	Profile connector (180°)	Internal support rail
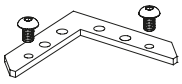	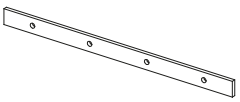	
1105-18	SF-44-15-200	1201-S

How to work with Fabric Frames

Valid for profiles:

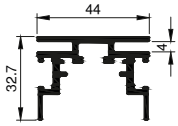

SF-44-10

Assembly instructions:

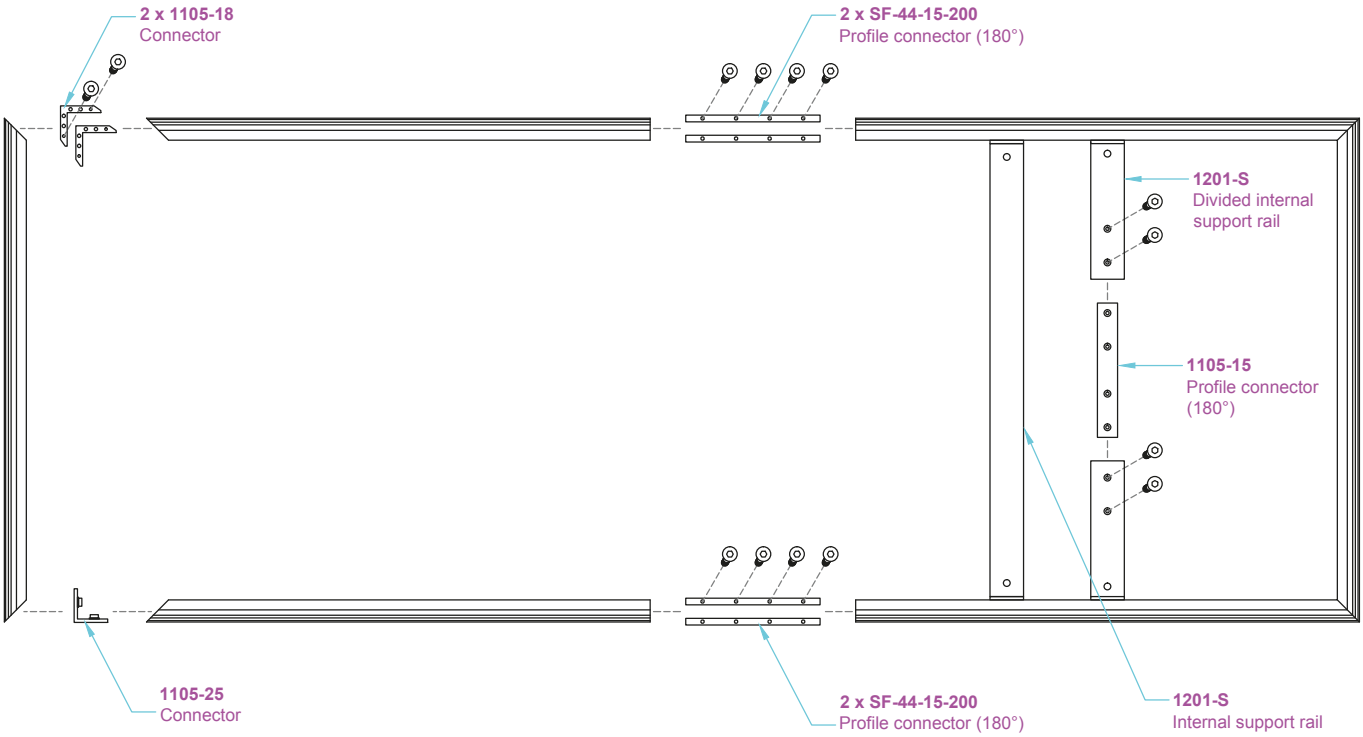

Accessories:

Top connector	Bottom connector	Profile connector (180°)	Internal support rail
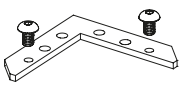	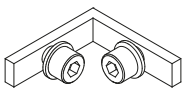	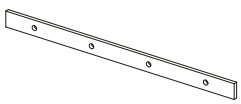	
1105-18	1105-25	SF-44-15-200	1201-S

w/ special screws: PC44-5-SF10

How to work with Fabric Frames

Valid for profiles:

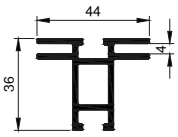

SF-36-2

Assembly instructions:

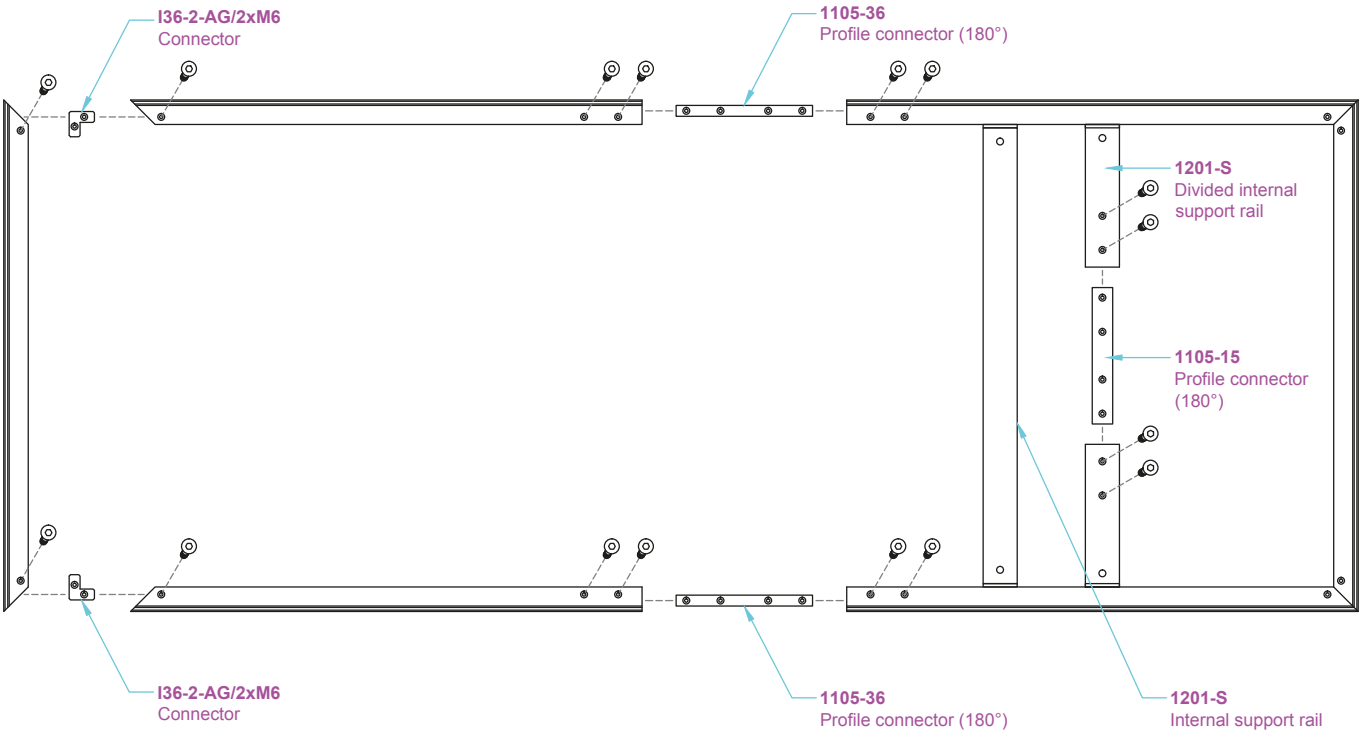

Accessories:

Connector	Handle	Profile connector (180°)	Internal support rail
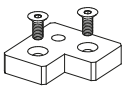	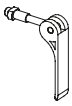	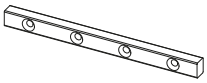	
I36-2-AG/2xM6	EL-HANDLE	1105-36	1201-S

How to work with Fabric Frames

Valid for profiles:

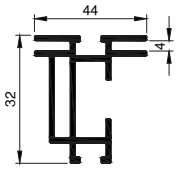

SF-44-2A

NEW

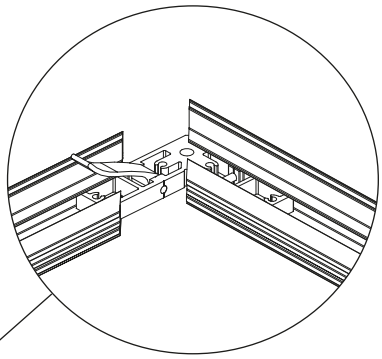

Assembly instructions:

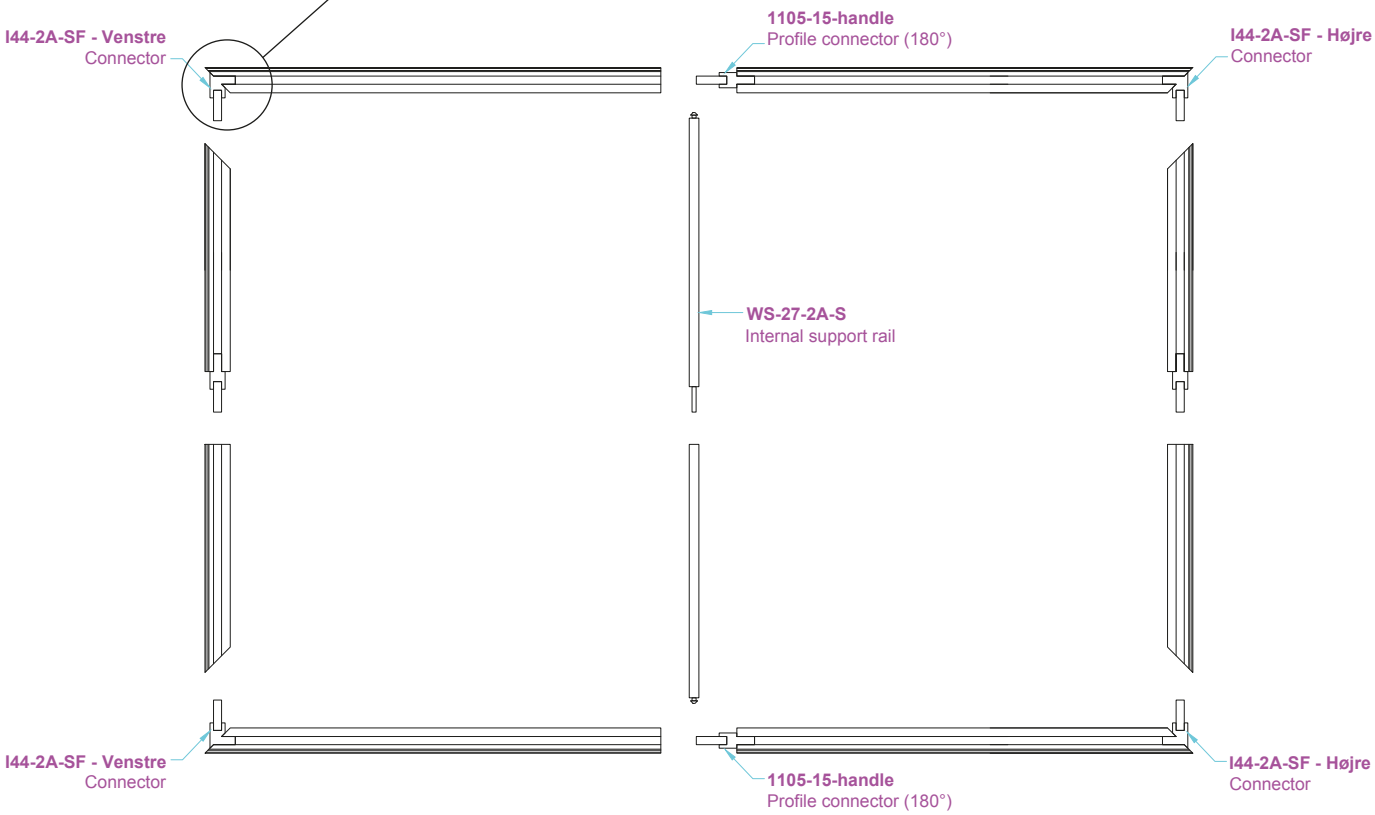

Accessories:

Connector	Connector	Profile connector (180°)	Internal support rail
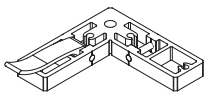	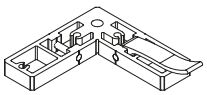	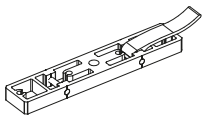	
I44-2A-SF - Venstre	I44-2A-SF - Højre	1105-15-handle	WS-27-2A-S

How to work with Fabric Frames

Valid for profiles:

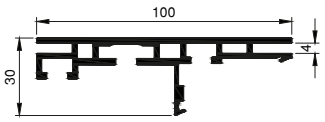

SF-44-100*

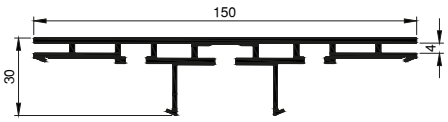

SF-44-150-2*

NEW

*can be fitted with 110-230V 6x3W LED modules

Mounting of RC36-5 in SF-44-150-2
placed between LED-modules

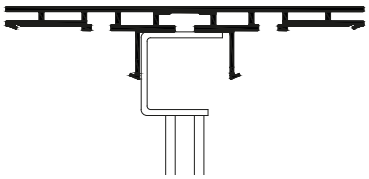

Mounting of 1201-S in SF-44-100
placed in back side

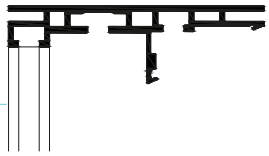

Assembly instructions:

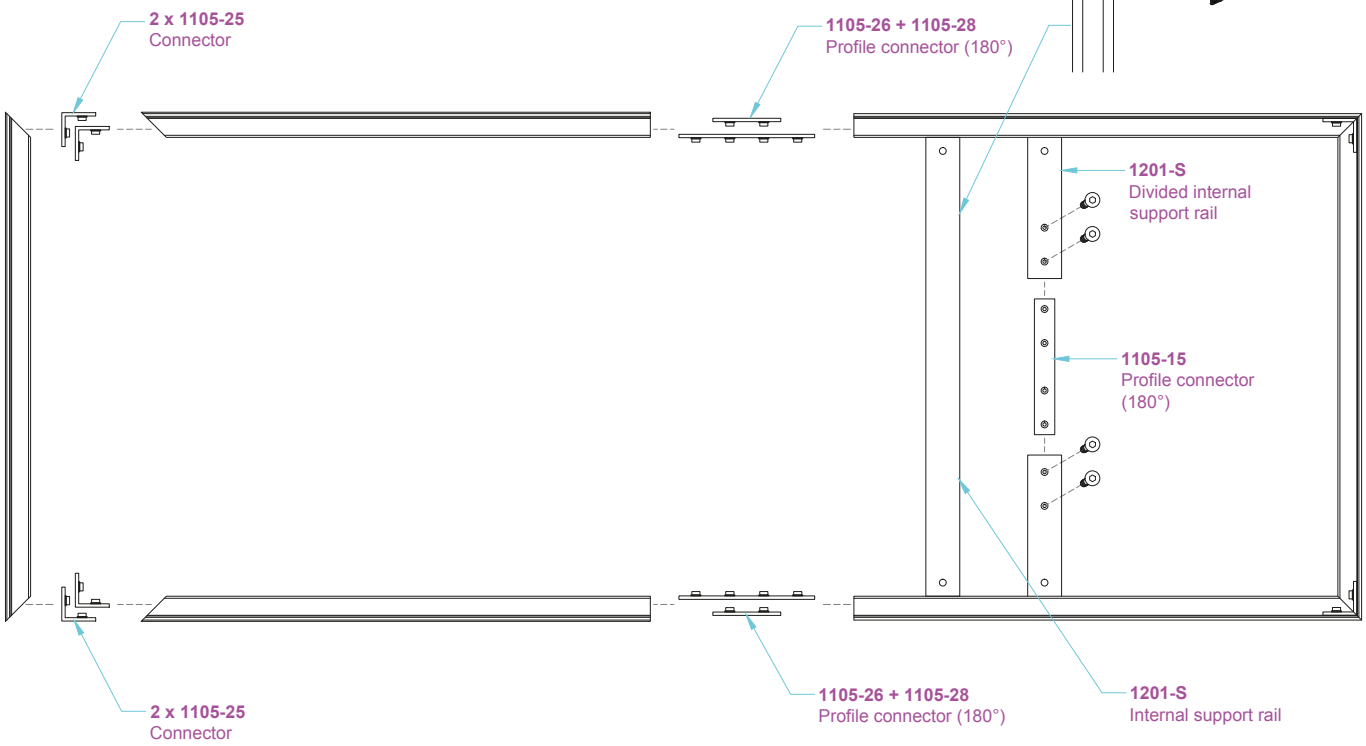

Accessories:

Connector	Profile connector (180°)	Internal support rail	Internal support rail
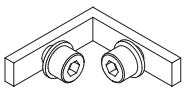	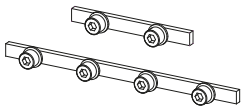		
1105-25	1105-26 + 1105-28	1201-S	RC36-5 + 1105-32
		Only for SF-44-100	*Only for SF-44-150-2*

How to work with Fabric Frames

Valid for profiles:

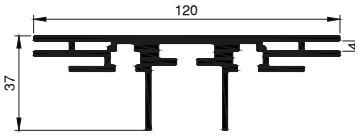

SF-44-120-2*

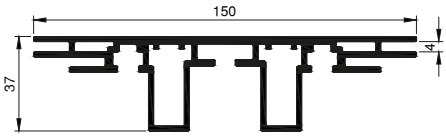

SF-44-150*

**can be fitted with 5x3W and 3x3W LED modules*

Mounting of WS-27-S in SF-44-150
placed between LED-modules

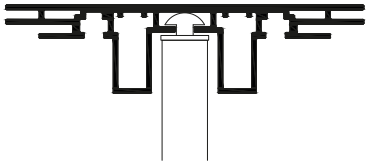

Mounting of WS-27-S in SF-44-120-2
placed between LED-modules

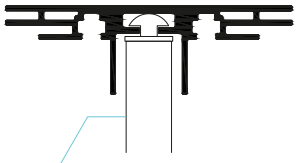

Assembly instructions:

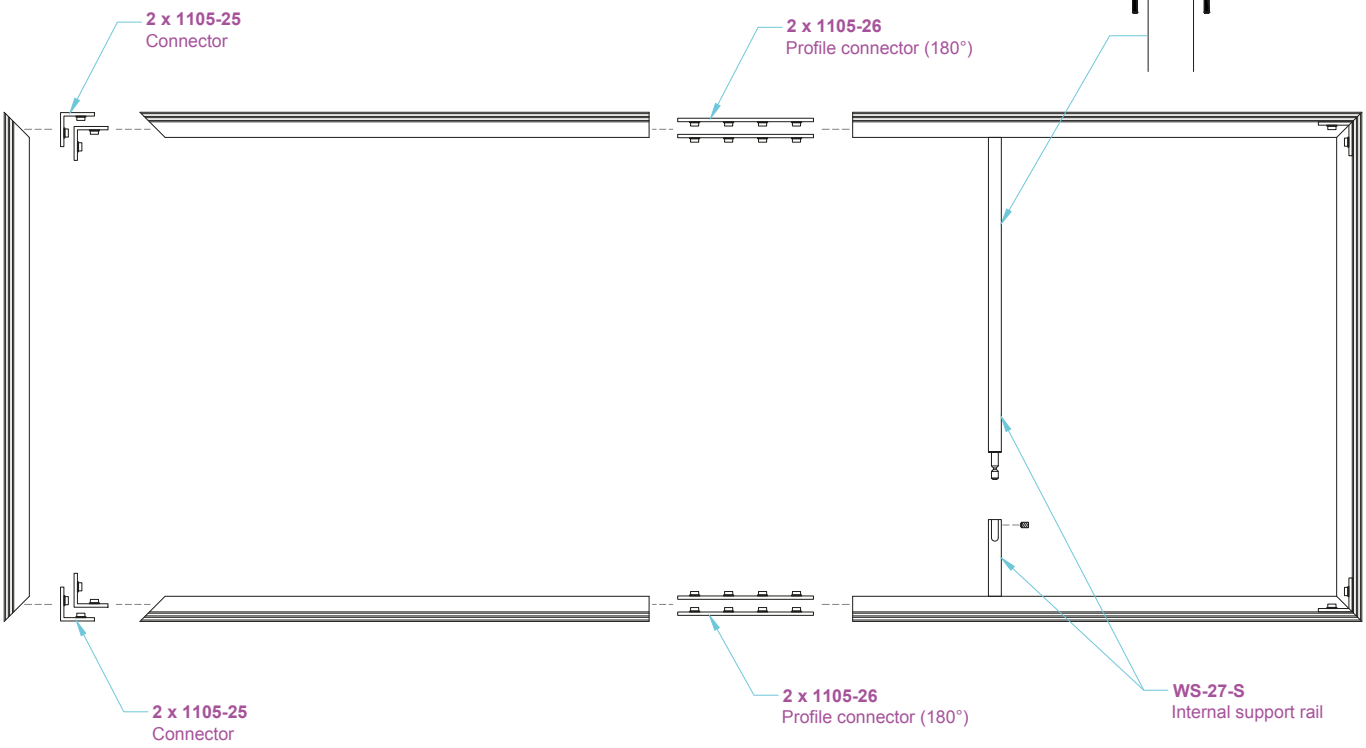

Accessories:

Connector	Profile connector (180°)	Internal support rail
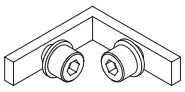	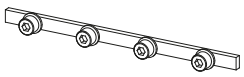	
1105-25	1105-26	WS-27-S

How to work with Fabric Frames

Valid for profiles:

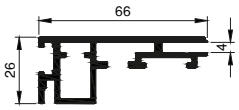

BLF-68

BLF-L

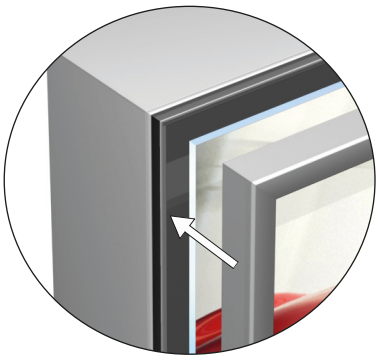

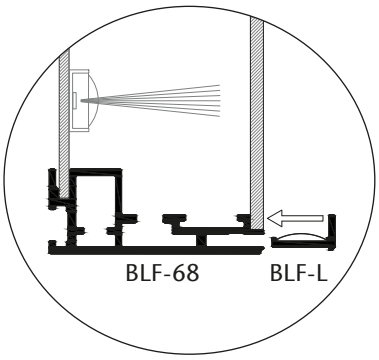

Assembly instructions:

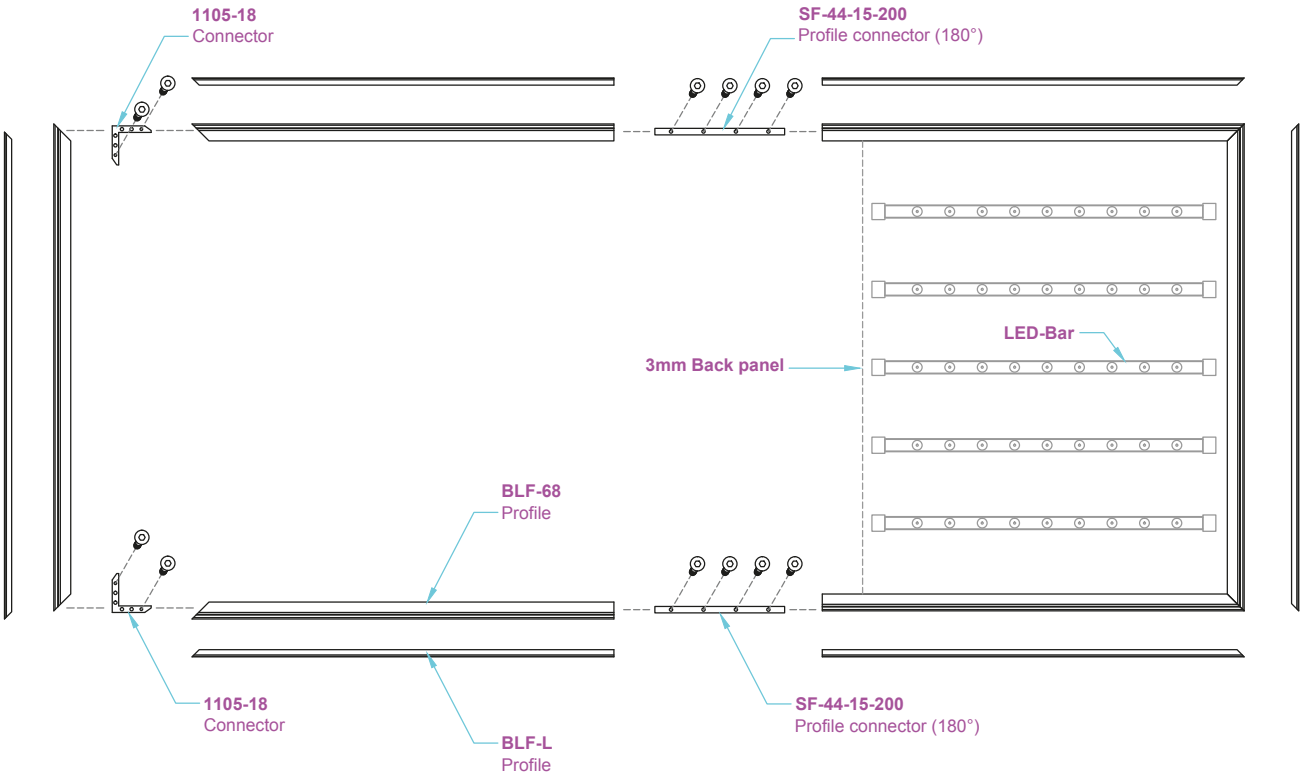

Accessories:

Connector	Profile connector (180°)
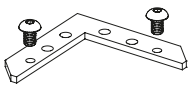	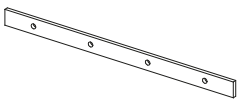
1105-18	SF-44-15-200

How to work with Fabric Frames

Valid for profiles:

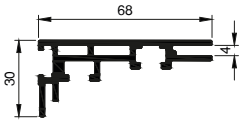

SF-44-68-2
Top & bottom profile

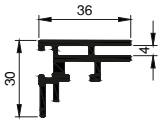

SF-36-1
Side profile

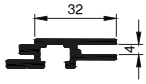

SF-32-EP
Extensions profile

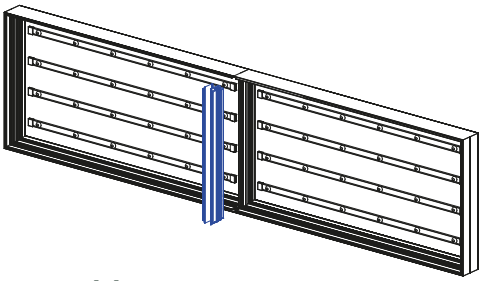

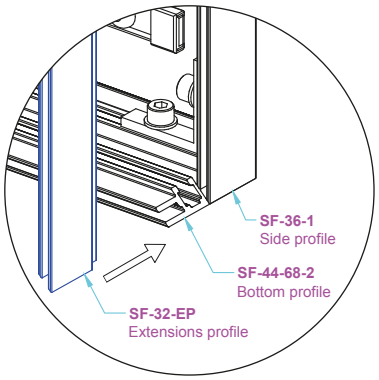

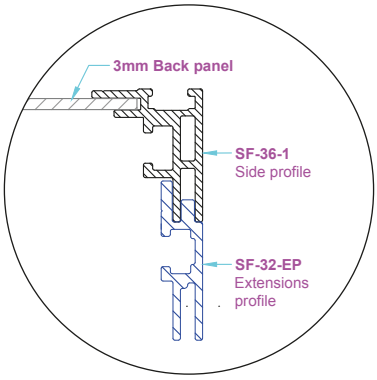

Assembly instructions:

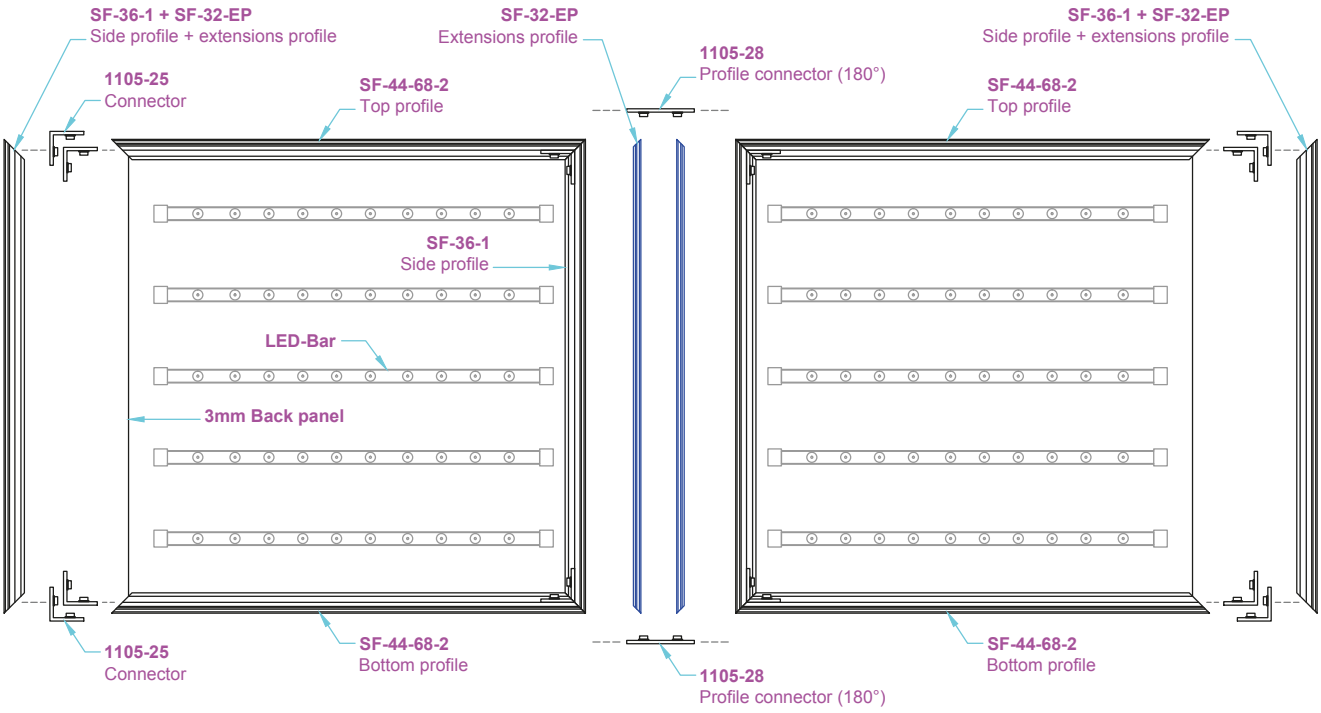

Accessories:

Connector	Profile connector (180°)	Hook bracket	Hook bracket
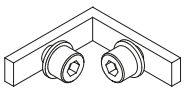	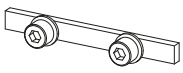	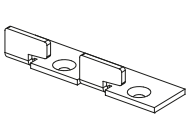	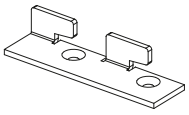
1105-25	1105-28	Hægtebeslag Venstre	Hægtebeslag Højre

How to work with Fabric Frames

Valid for profiles:

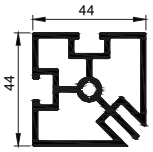

SF-44-44-2

Example:

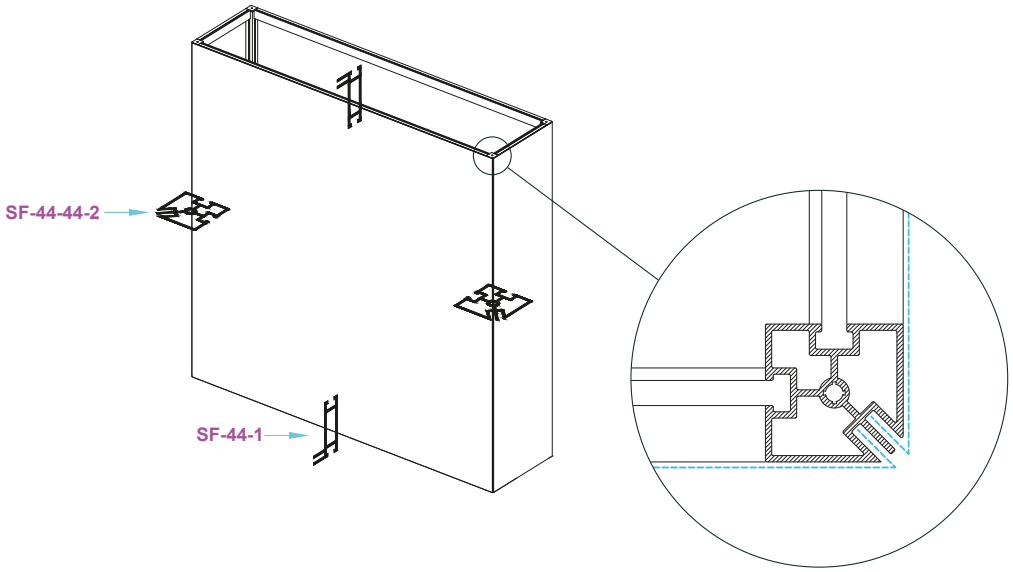

Assembly instructions:

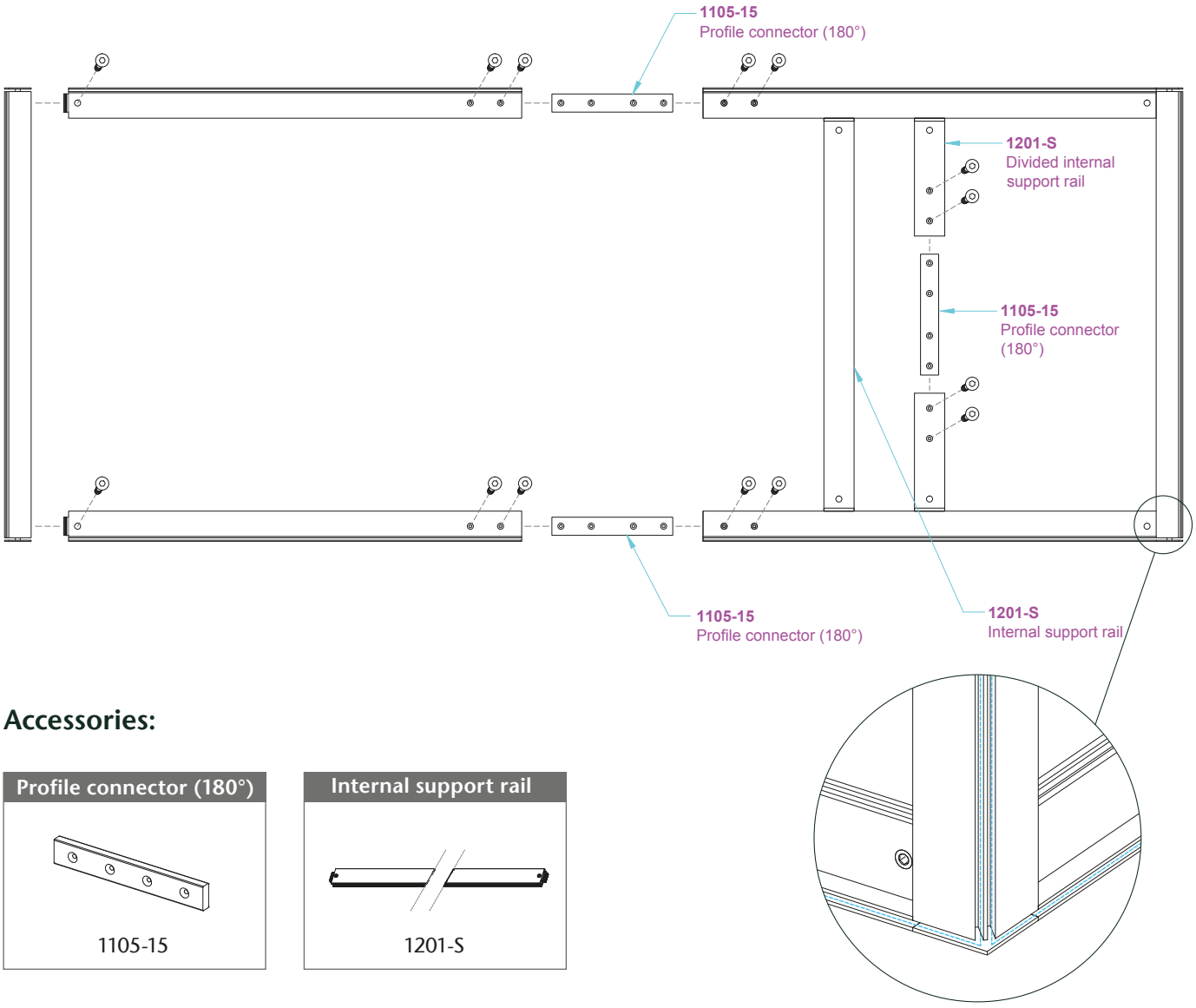

Accessories:

Profile connector (180°)	Internal support rail
1105-15	1201-S

How to work with Fabric Frames

Valid for profiles:

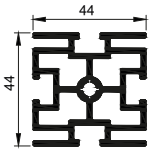

SF-44-44-4

Example:

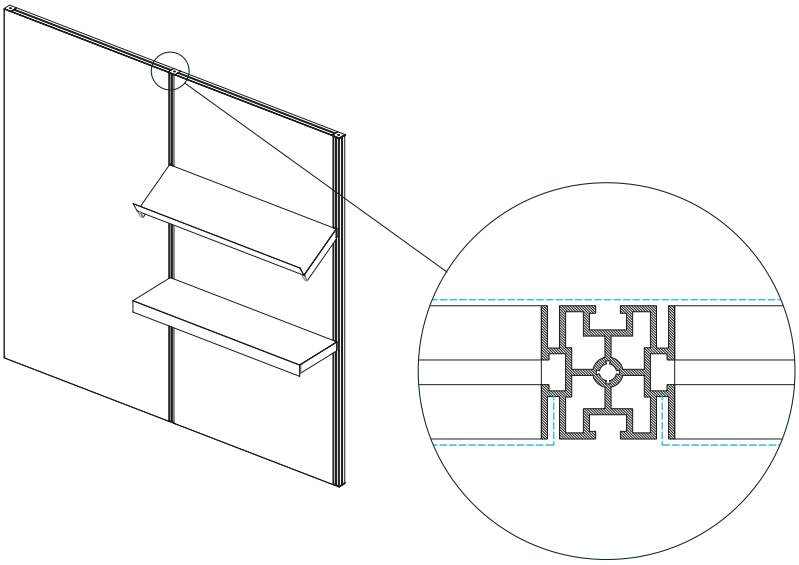

Assembly instructions:

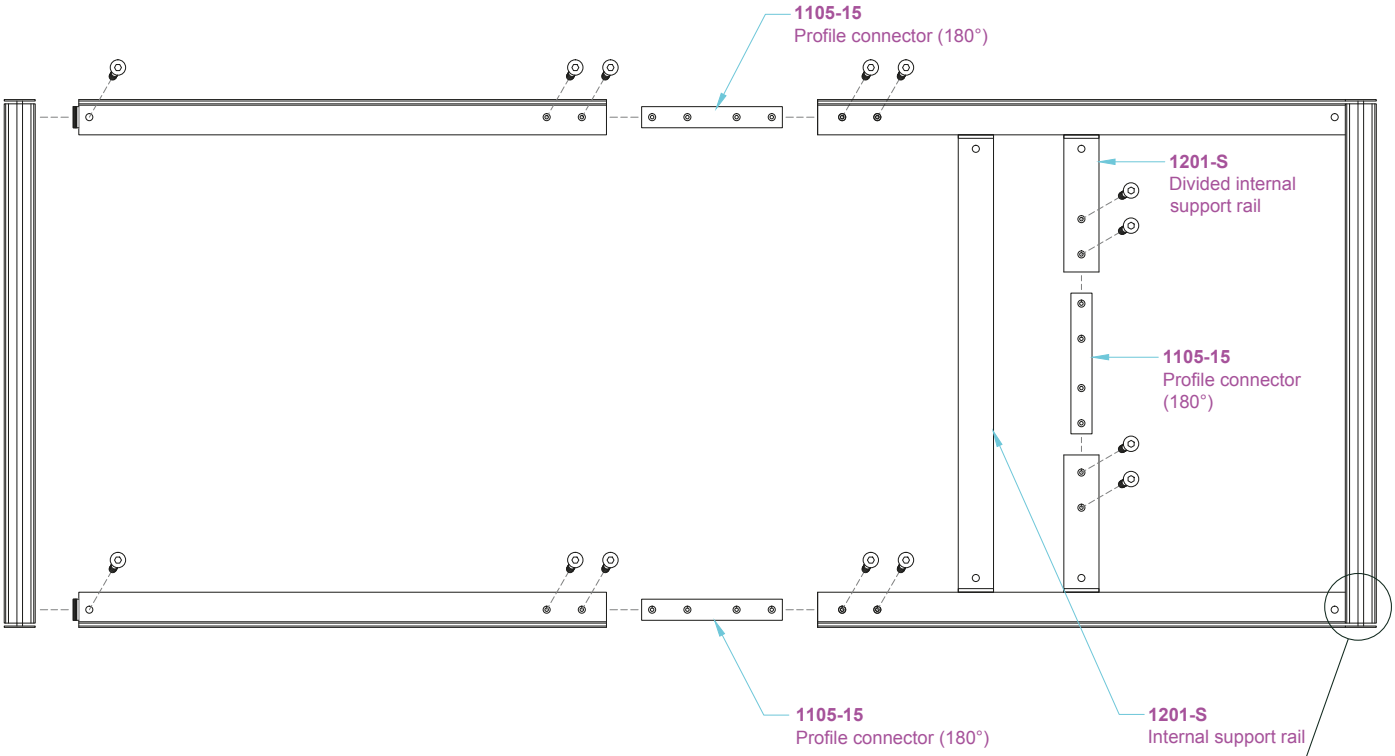

Accessories:

Profile connector (180°)	Internal support rail
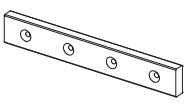	
1105-15	1201-S

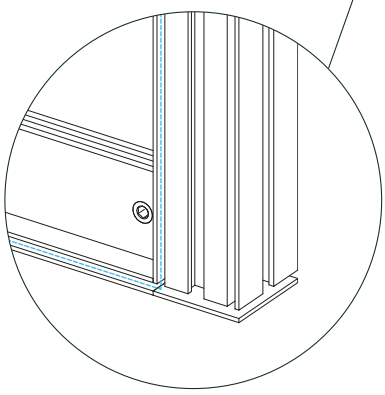

Frame construction

SF-44-1

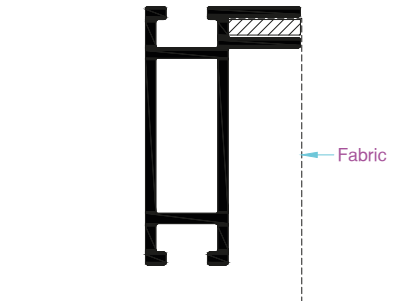

SF-44-2

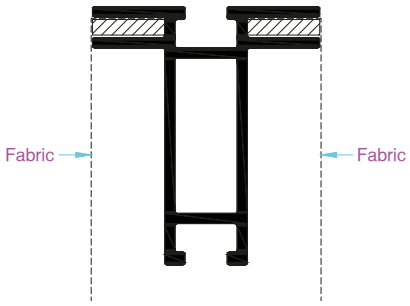

SF-44-2-C

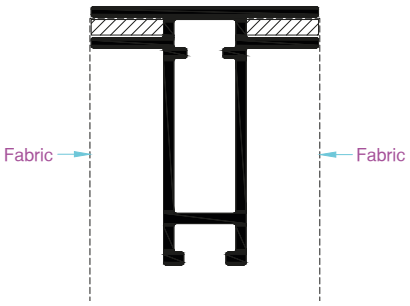

SF-44-4 LED: 12 V

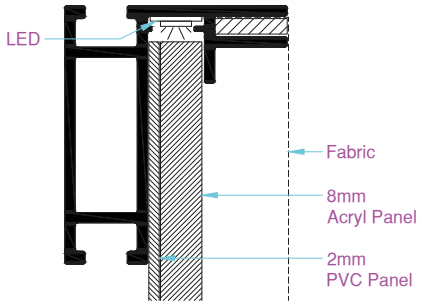

SF-44-5 LED: 12 V

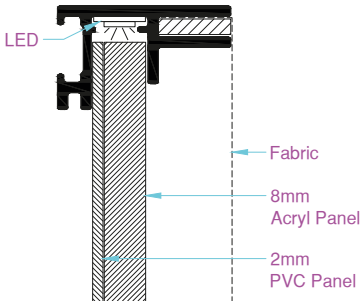

SF-44-6

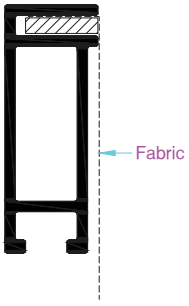

SF-44-7

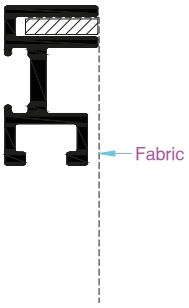

SF-44-8

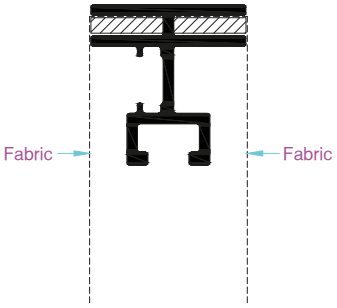

SF-44-9

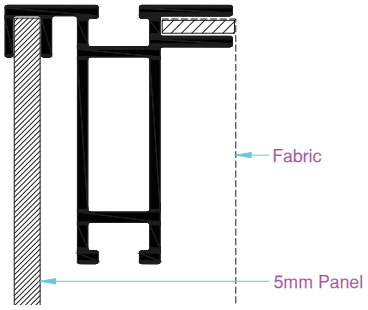

SF-44-10 ACOUSTIC

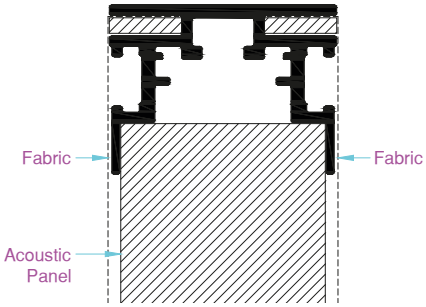

SF-44-2A

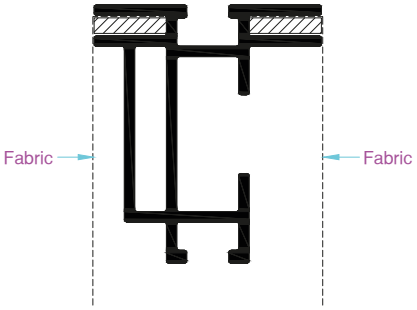

SF-36-2

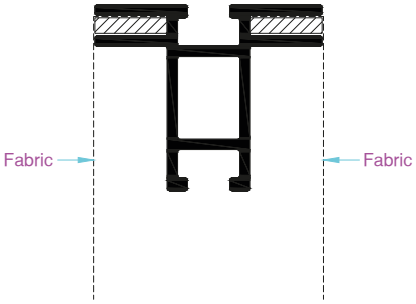

Frame construction

BLF-68 LED: 24 V

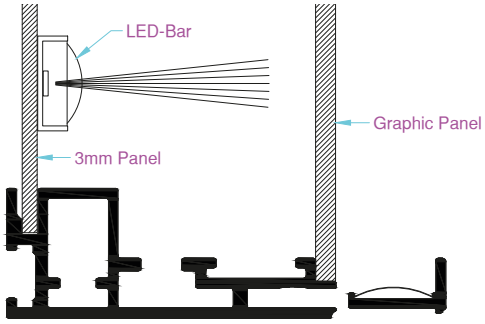

SF-44-68-2 LED: 24 V

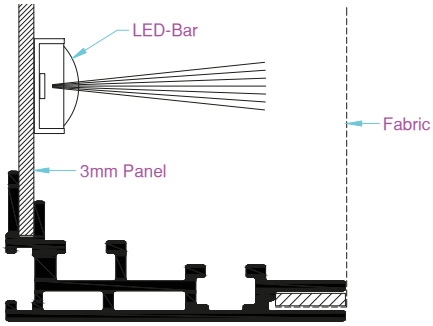

SF-44-85 LED: 24 V

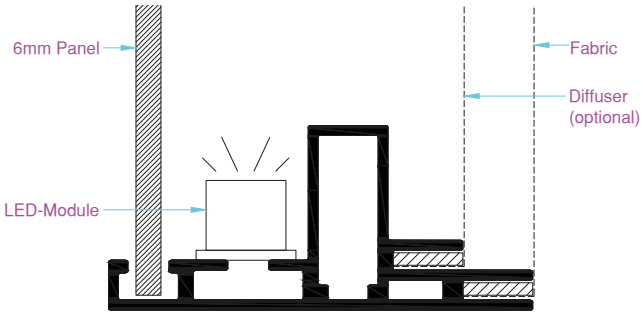

SF-44-100 LED: 110-230 V

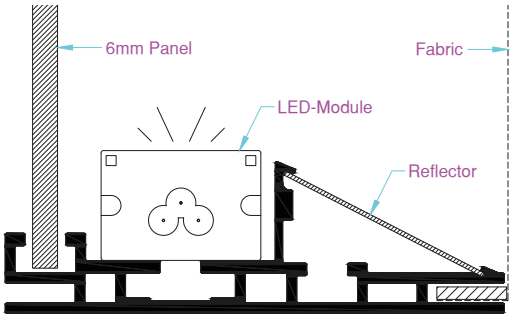

SF-44-120 LED: 24 V

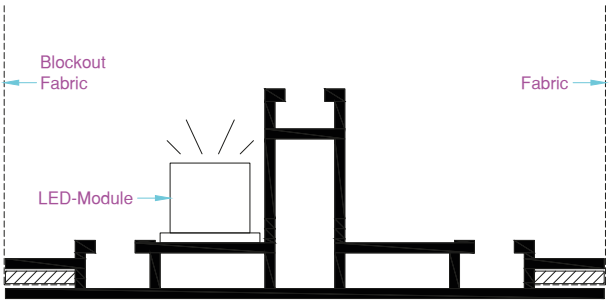

Single sided

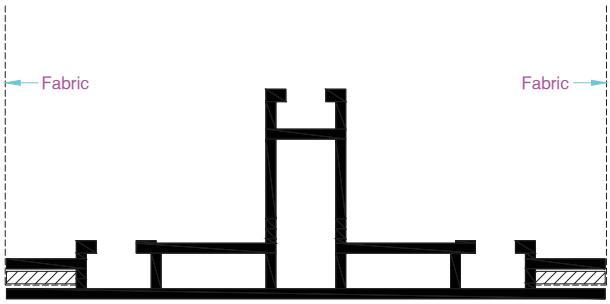

Double sided

SF-44-120-2 LED: 24 V

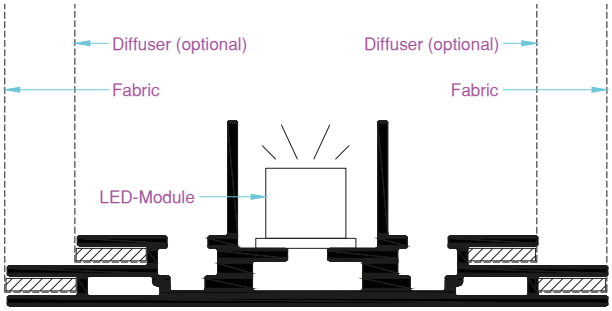

Double sided

Frame construction

SF-44-150 **LED: 24 V**

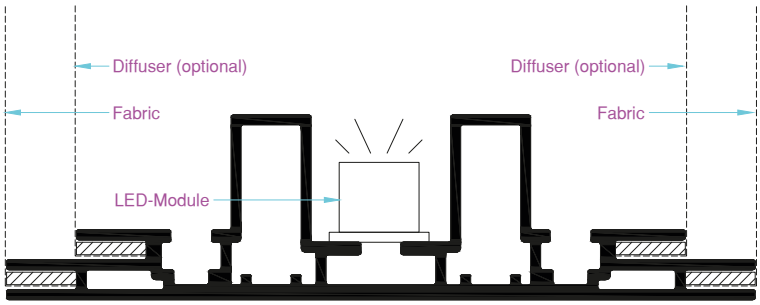

Double sided

SF-44-150-2 **LED: 110-230 V**

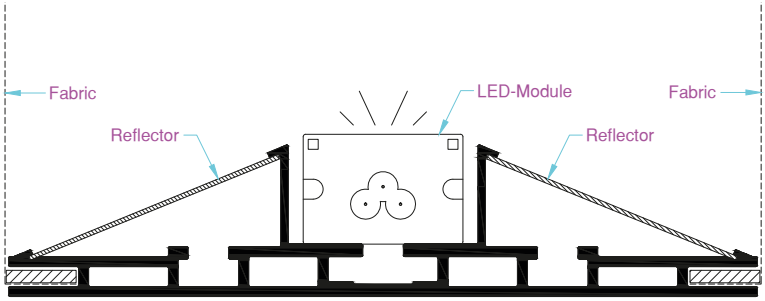

Double sided

SF-44-DOOR

The door can be used as left or right hinged

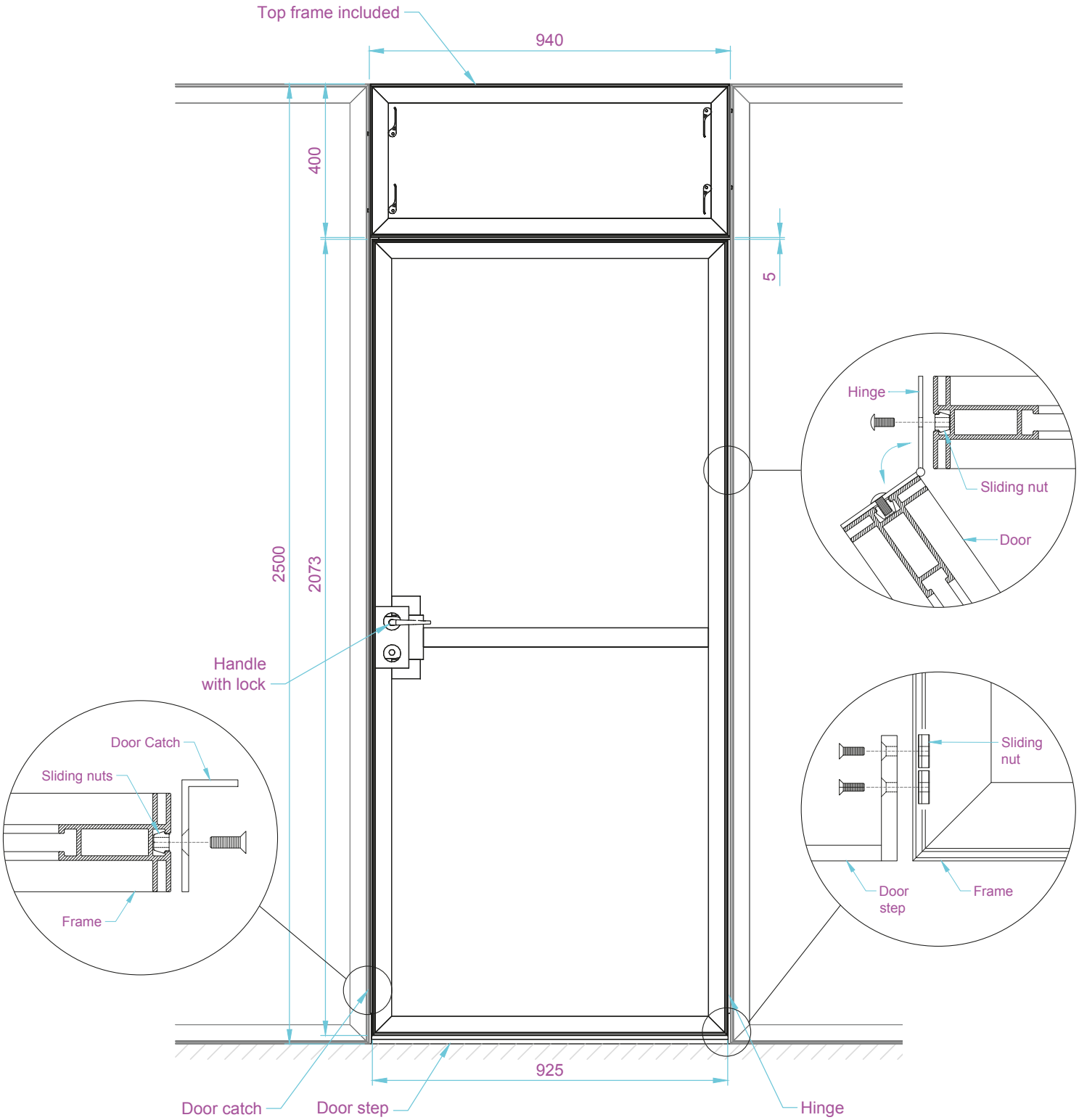

SF-44-DOOR fabric size:

1 x Door fabric W.925 x H.2073mm
1 x Top frame fabric W.940 x H.400mm

EL-DOOR-1 & EL-DOOR-2

The door can be used as left or right hinged

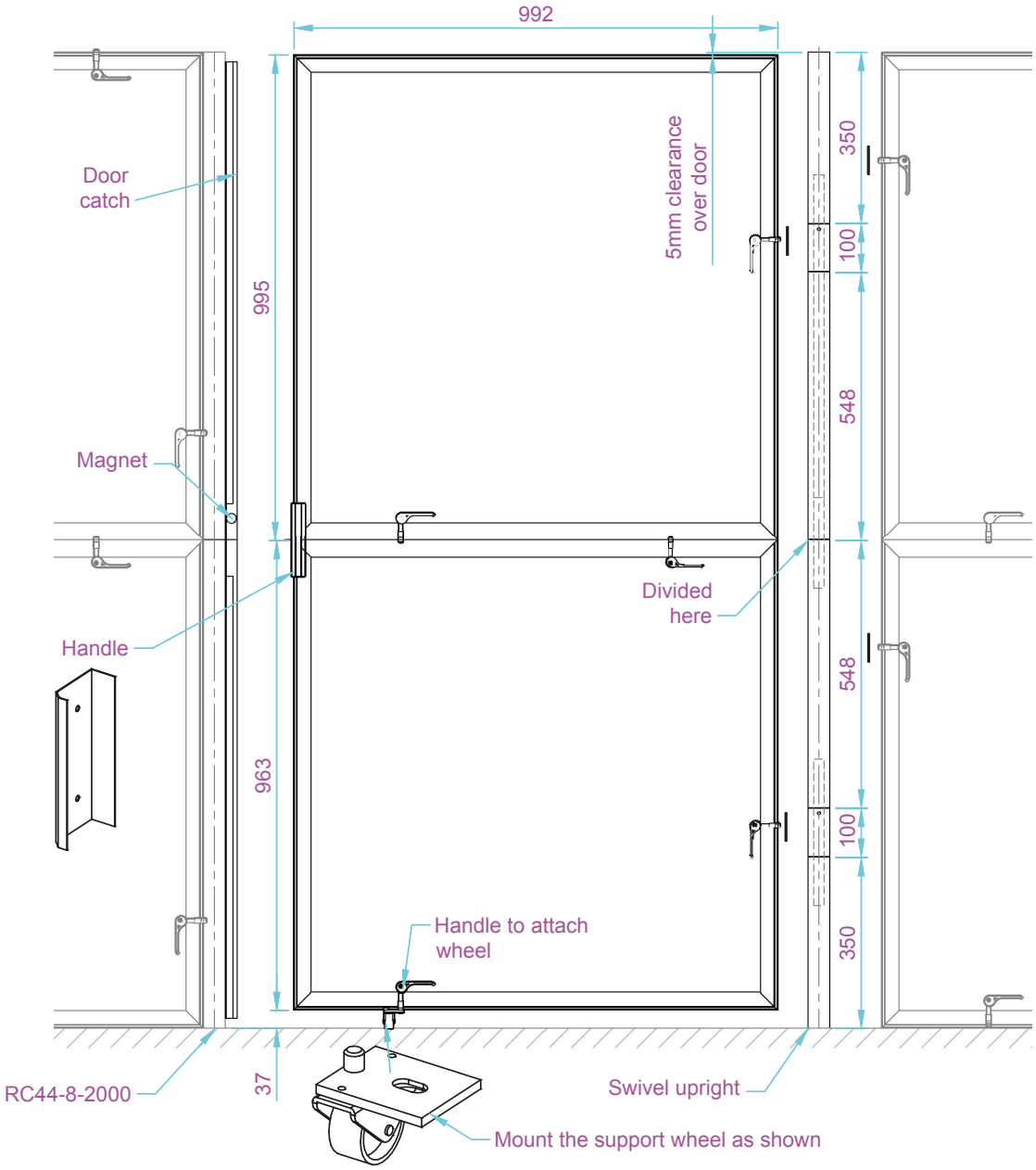

EL-DOOR-1 fabric size:

1 x Fabric W.992 x H.1958mm

EL-DOOR-2 fabric size:

1 x Top fabric W.992 x H.995mm
1 x Bottom fabric W.992 x H.963mm

EL-DOOR-3

The door can be used as left or right hinged

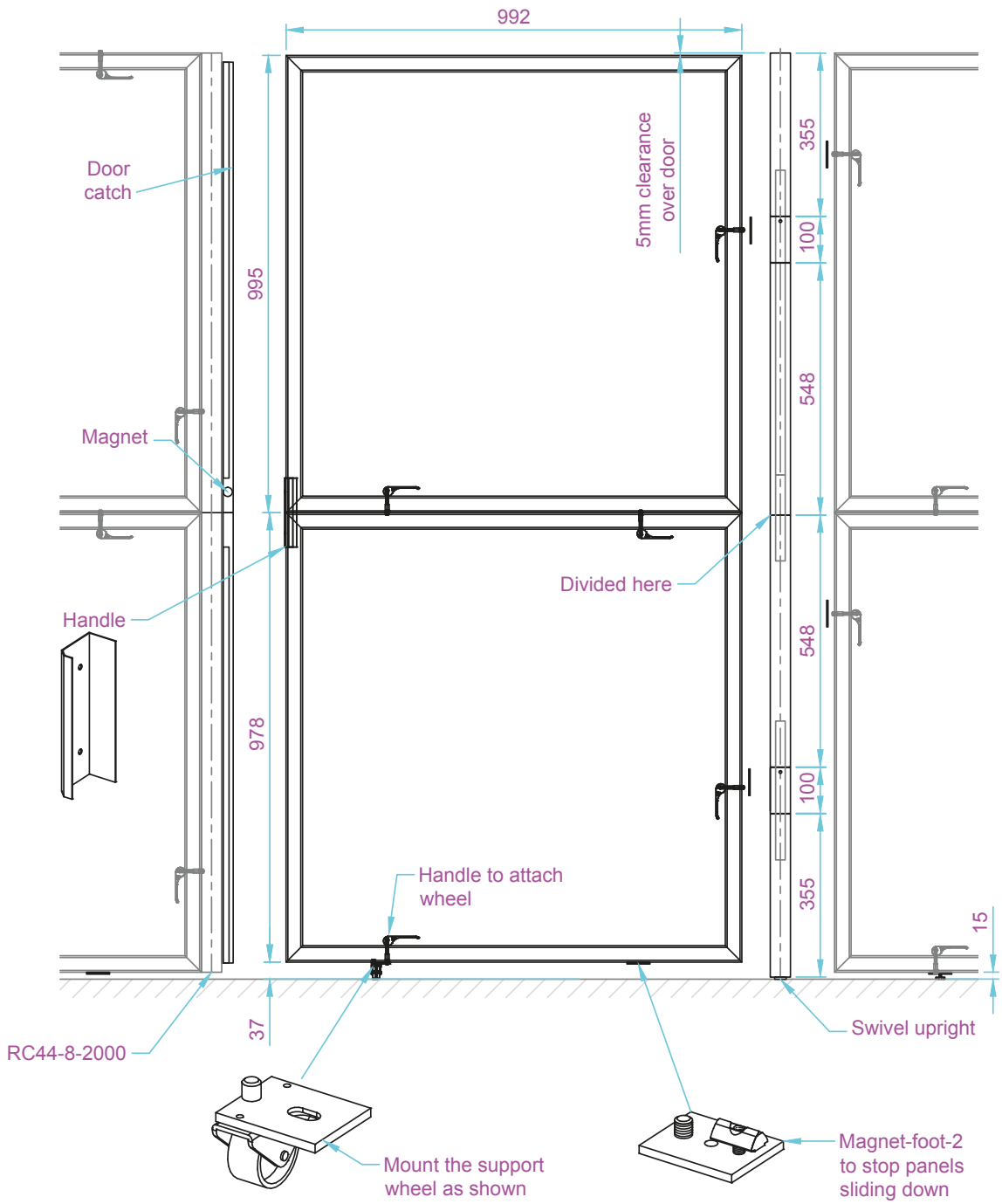

EL-DOOR-3 graphic size:

1 x Top panel W.992 x H.995mm
1 x Bottom panel W.992 x H.978mm

TV bracket

Valid for profiles:

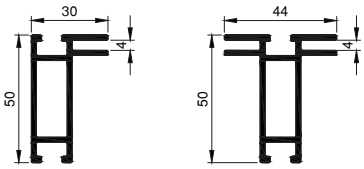

SF-44-1 SF-44-2

Assembly instructions:

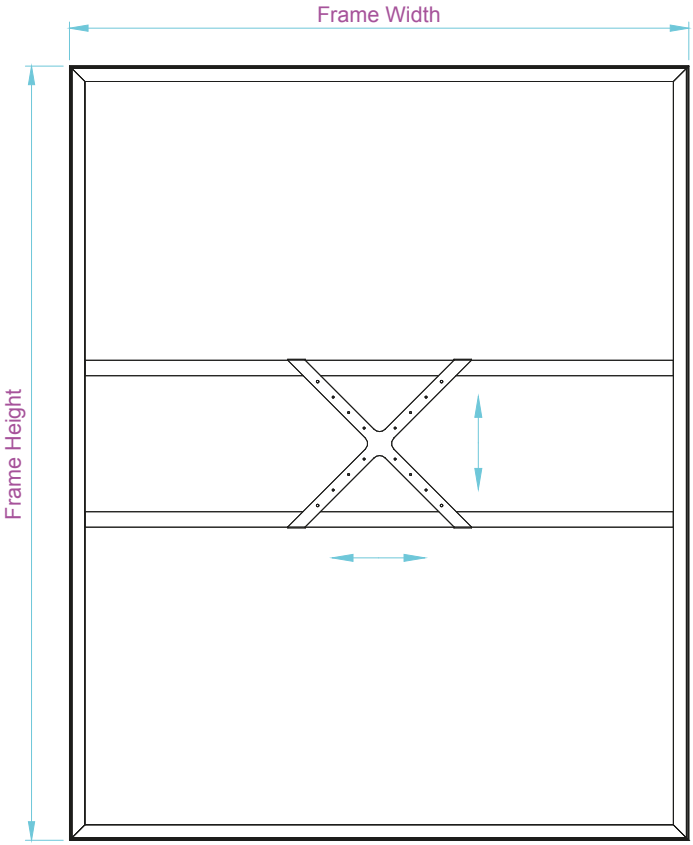

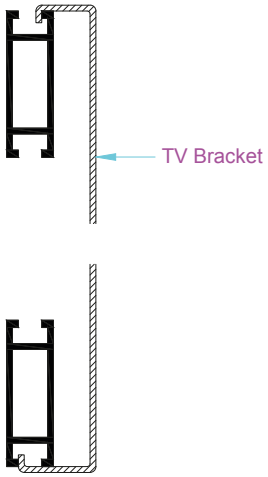

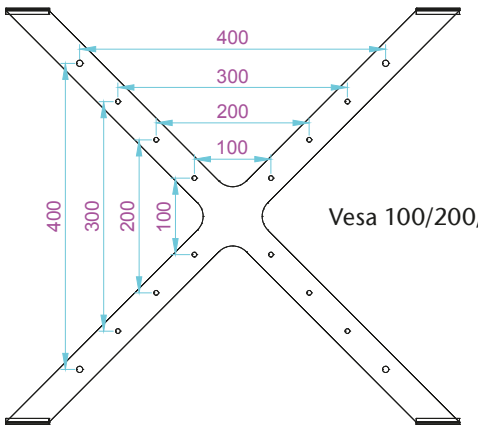

Vesa 100/200/300/400

How to work with Fabric Frames

Valid for profiles:

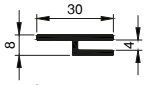

SF-44-H

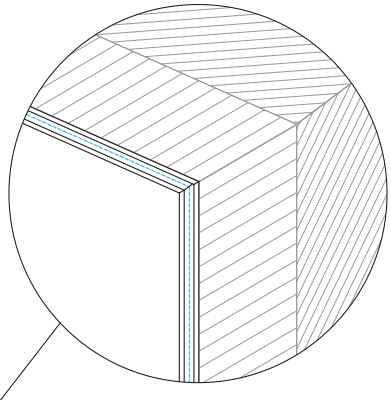

Frame in miter joint

Assembly instructions:

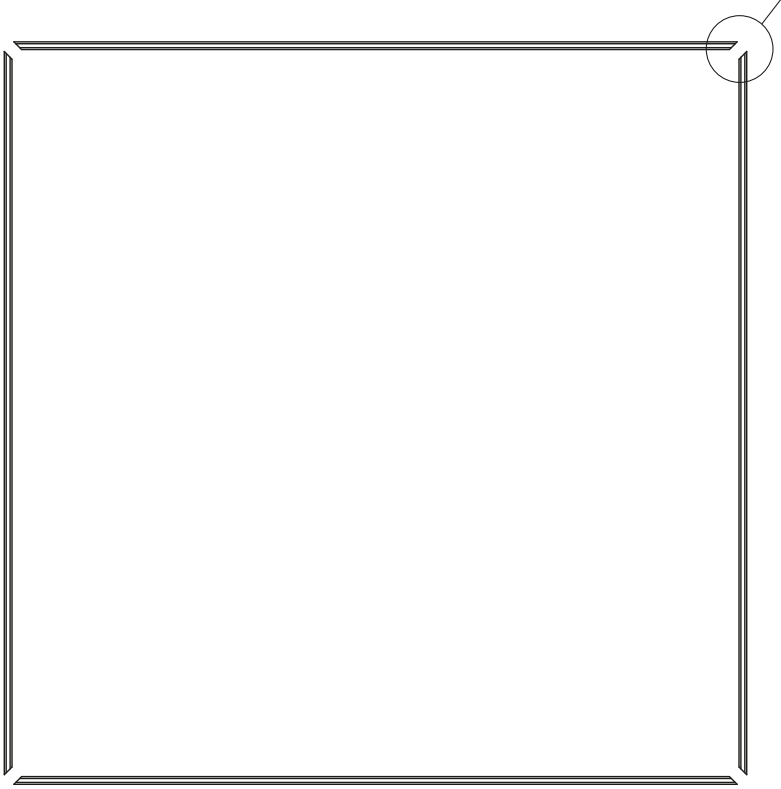

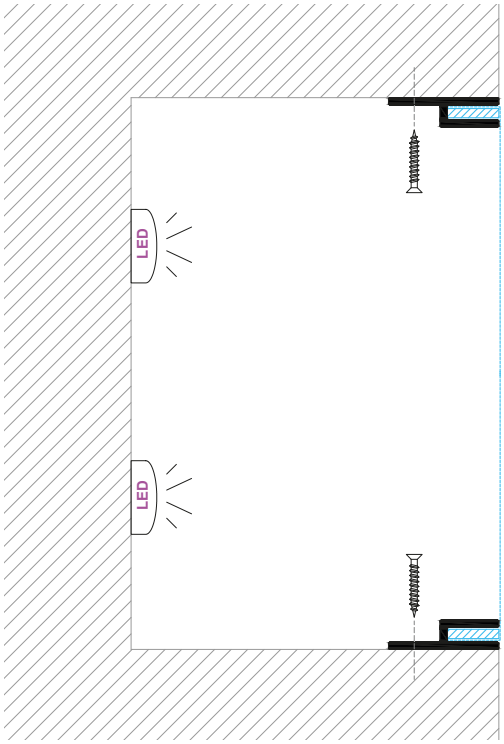

Wall brackets

SF-44-3-15x40

Fits to: SF-44-1, SF-44-4, SF-44-6 & SF-44-7

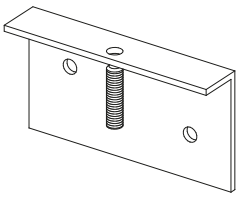

Mounting:

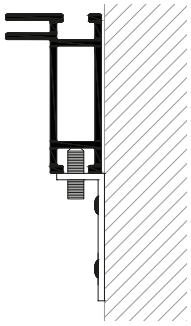

SF-44-3-8x40

Fits to: SF-44-5, SF-44-10, SF-44-68-2, SF-36-1, SF-44-100 & BLF-68

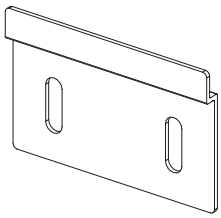

Mounting:

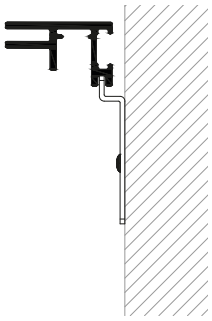

SF-44-4-30x60

Fits to: SF-44-2, SF-44-2-C & SF-36-2

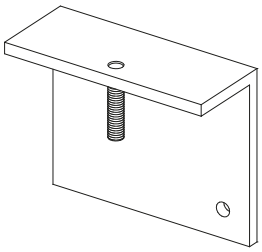

Mounting:

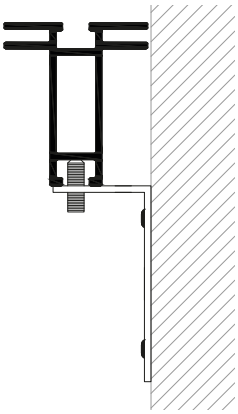

SF-44-85-40-13

Fits to: SF-44-85, SF-44-100

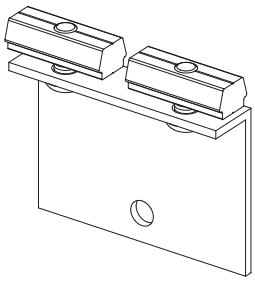

Mounting:

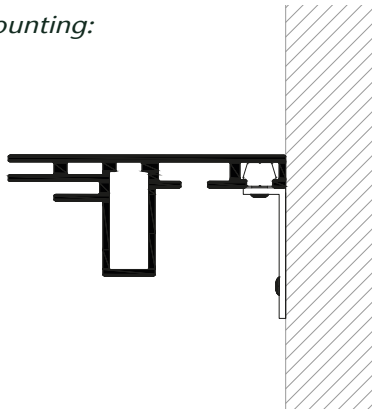

Steel bases

WSF-SFS 250x100x5mm

Fits to: SF-44-1, SF-44-2, SF-44-4, SF-44-9, SF-44-10 & SF-36-2

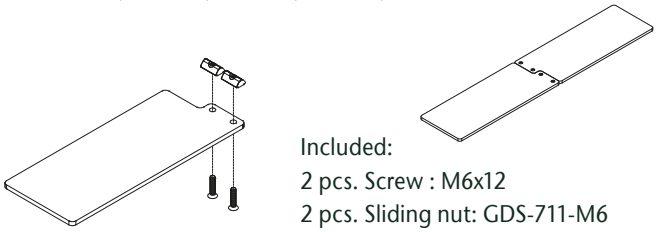

Included:
2 pcs. Screw : M6x12
2 pcs. Sliding nut: GDS-711-M6

Mounting:

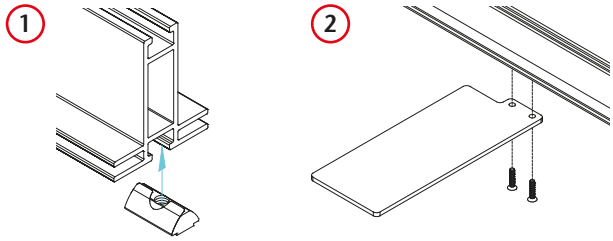

WSF-SFS-2 500x100x5mm

Fits to: SF-44-1, SF-44-2, SF-44-4, SF-44-9, SF-44-10 & SF-36-2

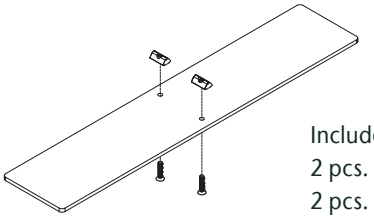

Included:
2 pcs. Screw : M6x12
2 pcs. Sliding nut : GDS-711-M6

Mounting:

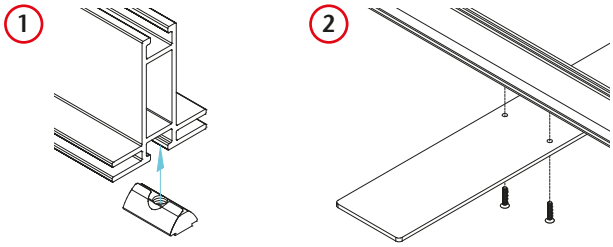

WSF-SFS-3 500x100x5mm

Fits to: SF-44-85, SF-44-120

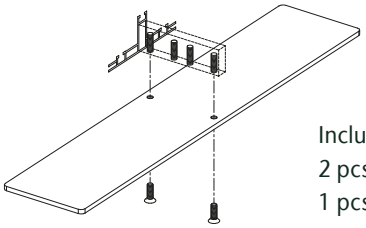

Included:
2 pcs. Screw: M6x30
1 pcs. Insert: SP12-30-100/G4xM6

Mounting:

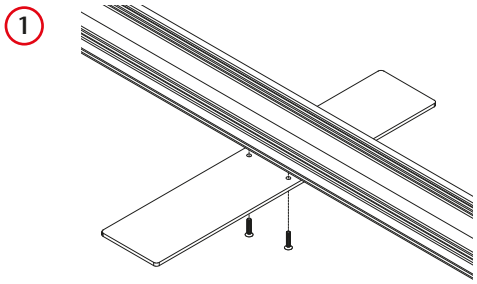

WSF-SFS-4 500x100x5mm

Fits to: SF-44-100, SF-44-120-2, SF-44-150 & SF-44-150-2

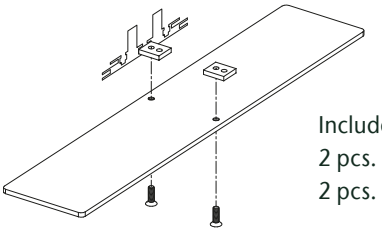

Included:
2 pcs. Screw: M6x16
2 pcs. Insert: SF711-120-150

Mounting:

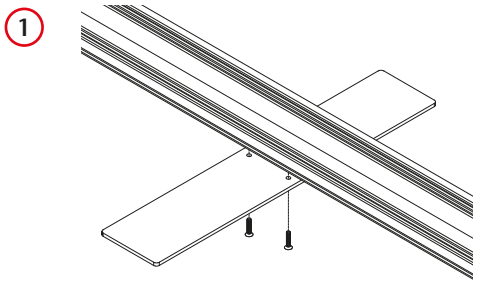

WSF-SFS-5 250x100x5mm

Fits to: SF-44-85, SF-44-120

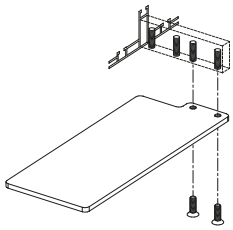

Included:
2 pcs. Screw : M6x30
1 pcs. Insert : SP12-30-100/G4xM6

Mounting:

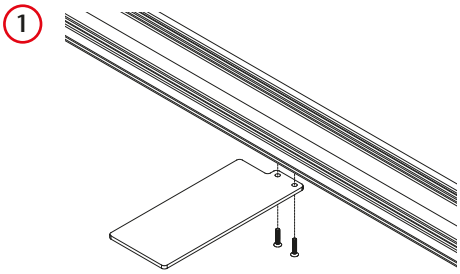

Steel bases

WSF-SFS-6 484x100x5mm

Fits to: SF-44-85, SF-44-120

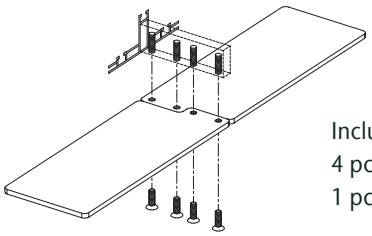

Included:
4 pcs. Screw : M6x30
1 pcs. Insert : SP12-30-100/G4xM6

Mounting:

1

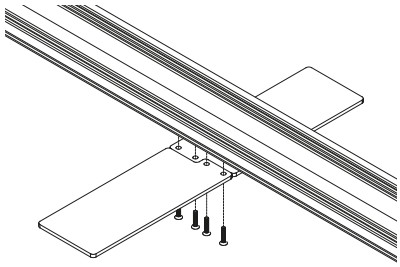

WSF-SFS-7 250x100x5mm

Fits to: SF-44-120-2 & SF-44-150

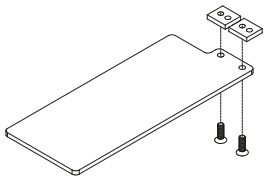

Included:
2 pcs. Screw: M6x16
2 pcs. Insert: SF711-120-150

Mounting:

1

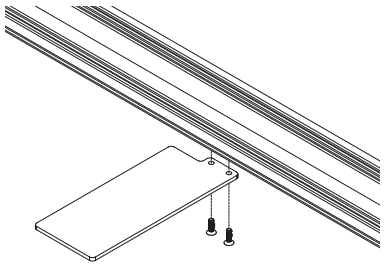

WSF-Handle 500x80x5mm

Fits to: SF-44-1, SF-44-2, SF-44-2A, SF-44-4, SF-44-9 & SF-36-2

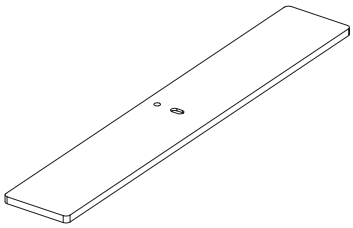

Mounting:

1

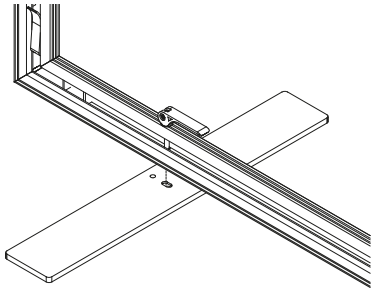

WSF-Frame Ø340x5mm

Fits to: SF-44-1, SF-44-2, SF-44-4, SF-44-9, SF-44-10 & SF-36-2

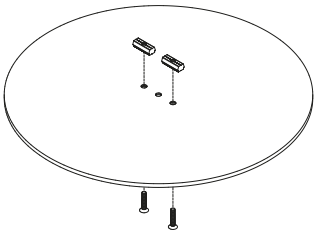

Included:
2 pcs. Screw : M6x12
2 pcs. Sliding nut: GDS-711-M6

Mounting:

1

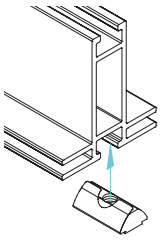

2

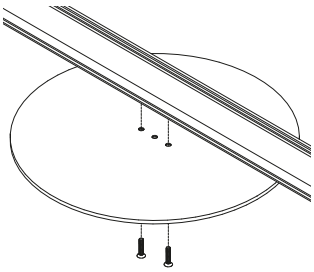

WSF-SFS-10 335x335x15mm - weight: 10 kg.

Fits to: SF-44-1, SF-44-4, SF-44,6, SF-44-7, SF-44-9, SF-44-85 & SF-44-100

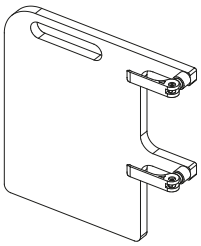

Included:
2 pcs. Handle: GDS-HANDLE

Mounting:

1

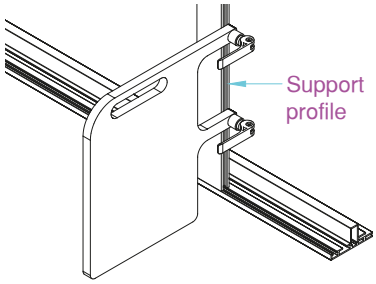

Steel bases

WSF-SFS-11 500x100x5mm

Fits to: SF-44-1, SF-44-2, SF-44-2A, SF-44-4, SF-44-9 & SF-36-2

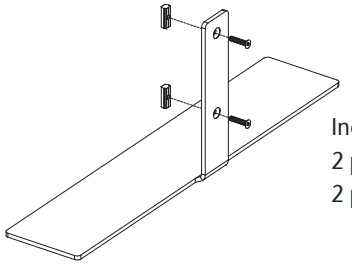

Included:
2 pcs. Screw : M6x12
2 pcs. Sliding nut: GDS-711-M6

Mounting:

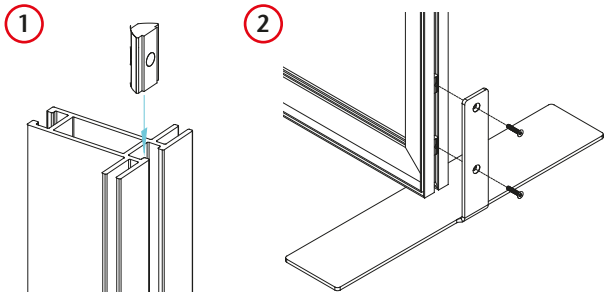

Fabric

Technical info:

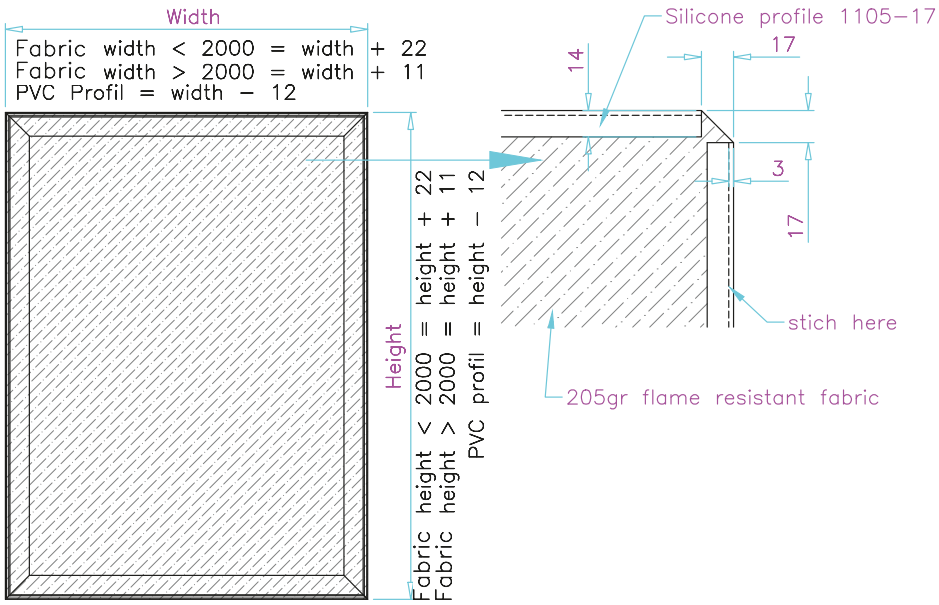

Printfiles:

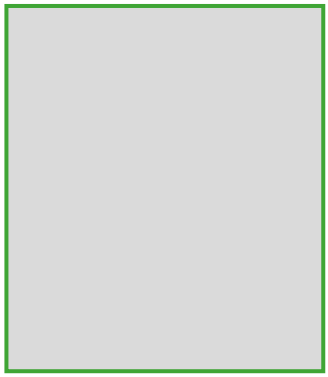

Smartframe:
Graphic dimensions = external dimensions of the frame

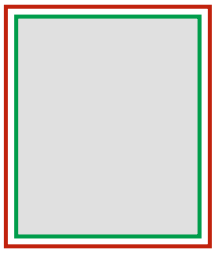

Graphics for print:
Bleed = graphic dimensions plus 40mm on each side

PDF in minimum 100 dpi in 1:1

Colors in CMYK

Fonts attached or outlined

Fitting the fabric:

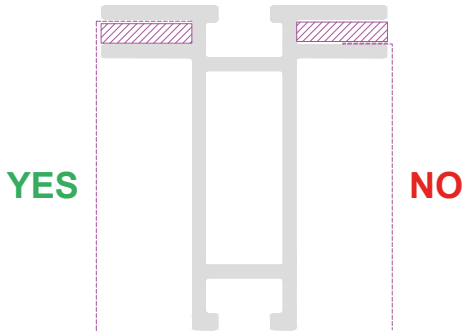

For more information on

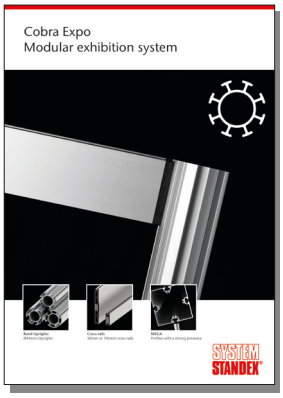

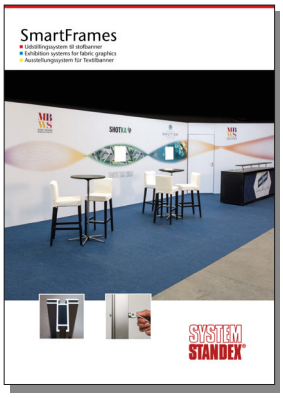

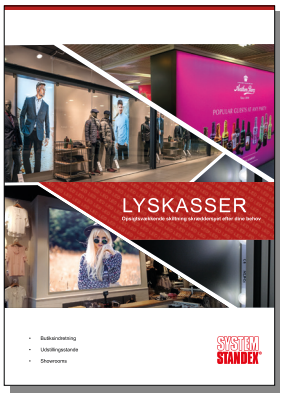

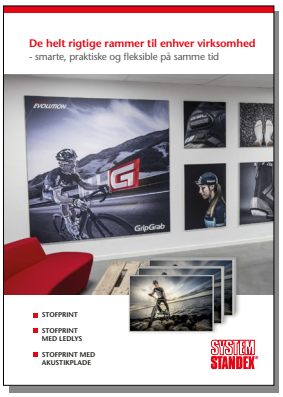

System Standex A/S
Herluf Trolles Vej 140 · DK - 5220 Odense SØ
Phone: +45 66 15 66 15 · Fax: +45 66 15 55 48
info@system-standex.dk · system-standex.dk

SYSTEM STANDEX®